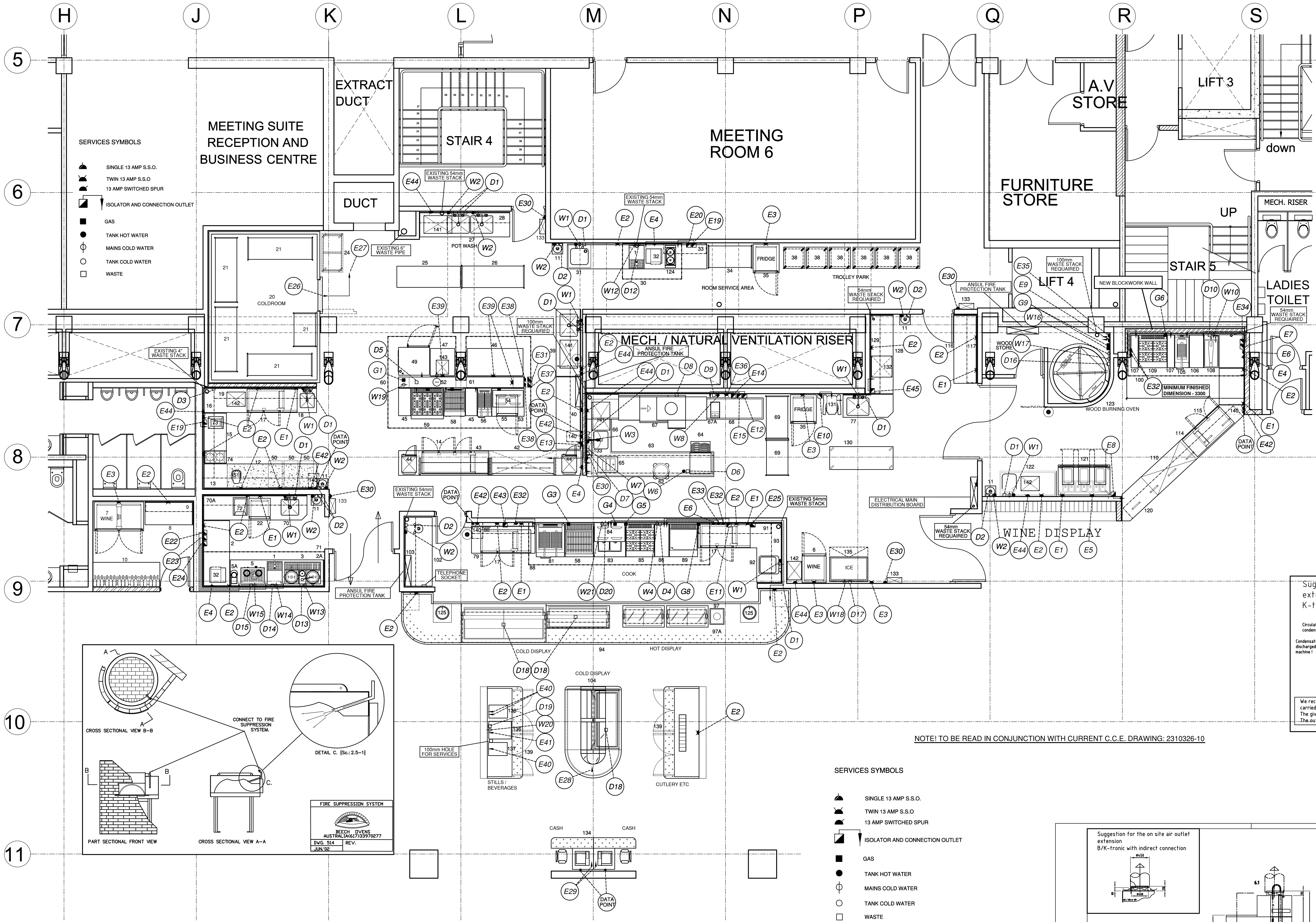

SERVICES SYMBOLS

- SINGLE 13 AMP S.S.O.
- TWIN 13 AMP S.S.O
- 13 AMP SWITCHED SPUR
- ISOLATOR AND CONNECTION OUTLET
- GAS
- TANK HOT WATER
- MAINS COLD WATER
- TANK COLD WATER
- WASTE

NOTE! TO BE READ IN CONJUNCTION WITH CURRENT C.C.E. DRAWING: 2310326-10

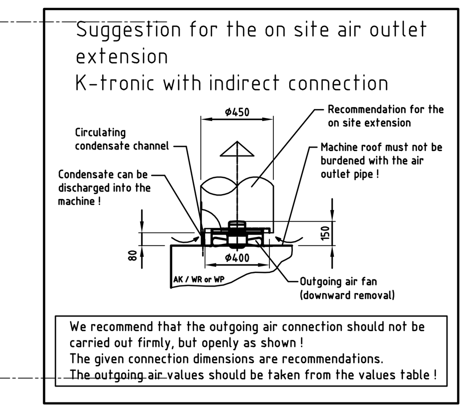

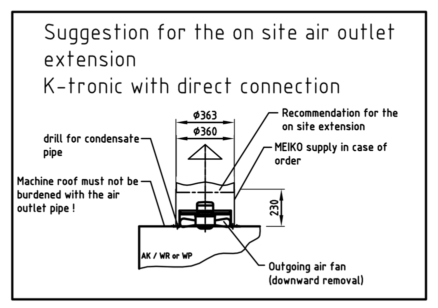

EQUIPMENT SCHEDULE:

1. WATER BOILER
1A. WATER BOILER (BY CLIENT)
2. WORKBENCH
2A. WORKBENCH
3. BULK BREWER (BY CLIENT)
4. OMITTED
5. TWO GROUP ESPRESSO MACHINE (BY CLIENT)
5A. COFFEE DOSER (BY CLIENT)
6. UPRIGHT WINE REFRIGERATOR
7. DOUBLE DOOR UPRIGHT WINE REFRIGERATOR
8. CUPBOARD (BY OTHERS)
9. WALL STORAGE SHELVING (BY OTHERS)
10. WINE BOTTLE DISPLAY UNIT
11. 4 OFF WASH HAND BASINS
12. WORKBENCH WITH PART MARBLE TOP (VOID UNDER)
13. WALL STORAGE SHELF
14. UNDERCOUNTER THREE DOOR REFRIGERATED COUNTER
15. WORKBENCH WITH LOW SECTION (FOT ITEM 74)
16. WALL STORAGE SHELF
17. 3 OFF UNDER COUNTER TWO DOOR REFRIGERATED COUNTERS
18. WORKBENCH WITH INSET SINK UNIT (VOID UNDER)
19. WALL STORAGE SHELF
20. COLD ROOM
21. 5 OFF FOUR TIER STORAGE RACKS
22. UNDERCOUNTER REFRIGERATOR
23. OMITTED
24. 2 OFF ROOM SERVICE TRAY TROLLEYS (1 OFF INDICATED)
25. WORKBENCH
26. FOUR TIER STORAGE RACK
27. DOUBLE BOWL POT WASH SINK UNIT
28. WALL STORAGE SHELF
29. OMITTED
30. CONDENSE CANOPY
31. WORKBENCH WITH INSET SINK UNIT
32. 2 OFF CONVEYOR TOASTERS
33. WALL STORAGE SHELF
34. FOUR TIER STORAGE SHELF
35. 2 OFF UPRIGHT REFRIGERATORS
36. OMITTED
37. OMITTED
38. 6 OFF TRAY TROLLEYS
39. WORKBENCH WITH INSET SINK UNIT (VOID UNDER)
40. WALL STORAGE SHELF
41. OMITTED
42. HOT PASS COUNTER WITH AMBIENT SECTION, HOTCUPBOARD AND HEATED GANTRY
43. COLD PASS COUNTER WITH GANTRY
44. 2 OFF MICROWAVE OVENS
45. 2 OFF INFILL WORKBENCHES
46. WORKBENCH
47. WORKBENCH
48. OMITTED
49. COMBINATION OVEN
50. 3 OFF INGREDIENT BINS
51. BENCH MIXER
52. WATER TREATMENT UNIT
53. WORKBENCH (VOID UNDER)
54. SALAMANDER GRILL
55. UNDERCOUNTER REFRIGERATOR
56. TWIN TANK DEEP FAT FRYER
57. OMITTED
58. 2 OFF CHARGRILLS
59. SIX BURNER OVEN RANGE
60. SHAPED COOKING EXTRACTION CANOPY
61. SERVICES DISTRIBUTION SPINE
62. MOBILE BIN
63. SHAPED DIRTIES DUMP TABLE WITH DISHWASH BASKET SHELF INSET SINK, SPRAY ARM AND TROUGH
64. UNDERCOUNTER GLASSWASHING MACHINE
65. WASTE DISPOSAL UNIT (INSET IN ITEM 63)
66. AUTOMATIC BASKET FEEDER TABLE
67. PASS THROUGH RACK TYPE DISHWASHING MACHINE
67A. WATER SOFTENER
68. CLEANS DISHWASH TABLE
69. 2 OFF FOUR TIER STORAGE RACKS
70. SHAPED WORKBENCH WITH INSET SINK (PART VOID UNDER)
70A. WALL STORAGE SHELVING
71. CONDENSE CANOPY
72. MILKPACK
73. BENCH SCALES
74. TWO HOTPLATE BOILING TOP
75. OMITTED
76. OMITTED
77. SHAPED WORKBENCH WITH INSET SINK
78. OMITTED
79. WORKBENCH (VOID UNDER)
80. WALL STORAGE SHELF
81. TWIN BASKET DEEP FAT FRYER
82. OMITTED
83. BAIN MARIE
84. SALAMANDER GRILL ON WALL BRACKET
85. SIX BURNER CONVECTION OVEN RANGE
86. INFILL WORKBENCH
87. OMITTED
88. COOKING EXTRACTION CANOPY
89. GRIDDLE ON STAND
90. OMITTED
91. WALL STORAGE SHELF
92. L-SHAPED WORKBENCH WITH INSET SINK (PART VOID UNDER)
93. WALL STORAGE SHELF
94. SHAPED HOT & COLD SERVERY COUNTER
95. OMITTED
96. OMITTED
97. LIFT-OFF INDUCTION HOB
97A. LIFT-OFF CARVERY PAD
98. OMITTED
99. OMITTED
100. COOKING EXTRACTION CANOPY
101. OMITTED
102. WORKBENCH WITH INSET WASH HAND BASIN
103. WALL STORAGE SHELF
104. REFRIGERATED / AMBIENT DISPLAY COUNTER
105. SINGLE DEEP FAT FRYER
106. INFILL WORKBENCH
107. 2 OFF INFILL WORKBENCHES
108. PASTA COOKER
109. SIX BURNER OVEN RANGE
110. HOTCUPBOARD
111. OMITTED
112. OMITTED
113. HEATED GANTRY
114. SHAPED AMBIENT COUNTER WITH OVERSHELF AND QUARTZ LIGHTS UNDER
115. TWO DOOR REFRIGERATED COUNTER
116. WORKBENCH
117. WALL STORAGE SHELVING
118. OMITTED
119. OMITTED
120. OMITTED
121. SALADETTE COUNTER WITH DRAWERS
122. SINK UNIT
123. WOOD BURNING OVEN
124. TWO RING BOILING TOP
125. 2 OFF SOUP KETTLES
126. OMITTED
127. OMITTED
128. WORKBENCH
129. WALL STORAGE SHELVING
130. CENTRE BENCH
131. FLOOR MIXER
132. PASTRY ROLLER
133. 5 OFF INSECT KILLERS
134. CASHIER STATION
135. ICE MACHINE
136. COFFEE MACHINE (BY CLIENT)
137. MILK CHILLER (BY CLIENT)
138. CUP WARMER (BY CLIENT)
139. 2 OFF AMBIENT COUNTERS WITH CUPBOARDS UNDER
140. 4 OFF SHELVES FOR PRINTERS (PRINTERS BY CLIENT)
141. 3 OFF GREASE TRAPS
142. 3 OFF GREASE TRAPS
143. GREASE TRAP

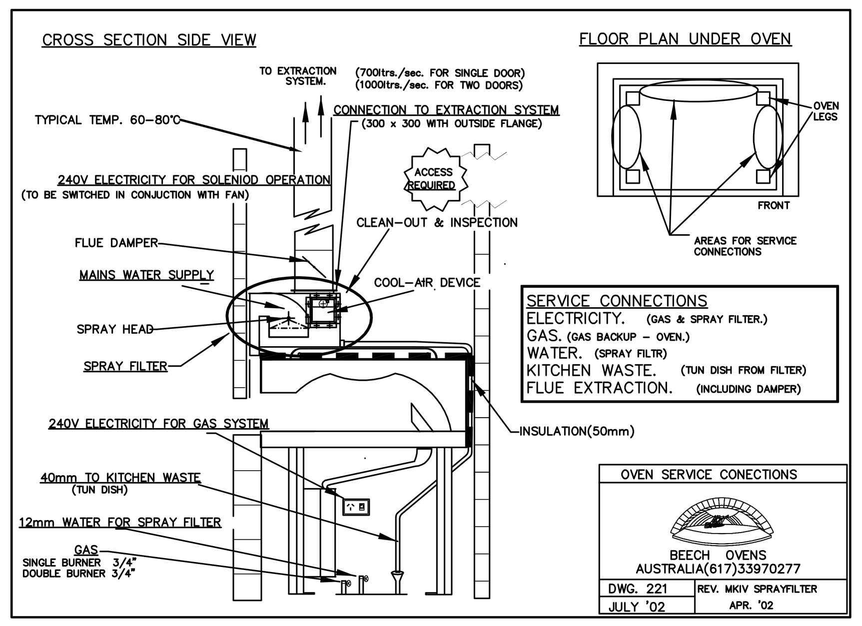

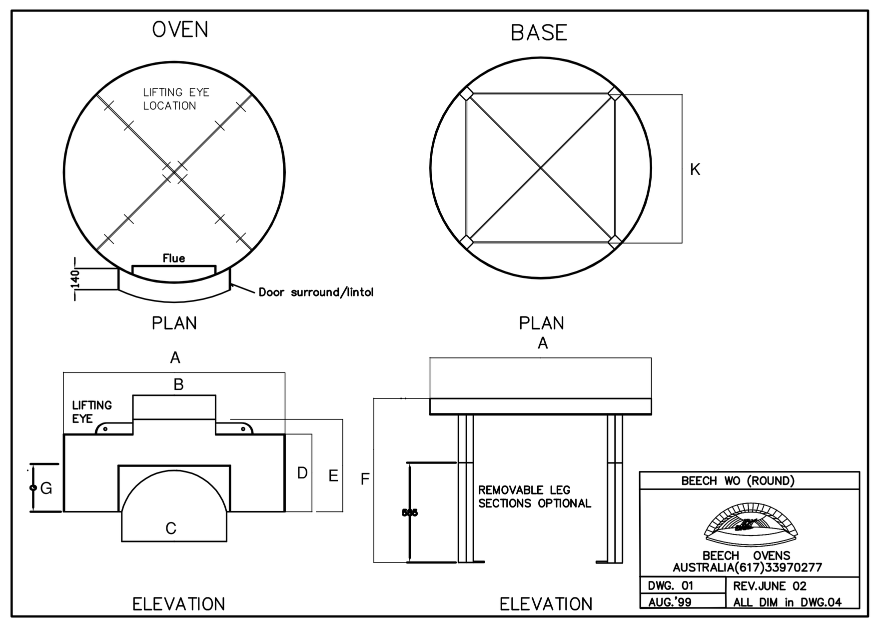

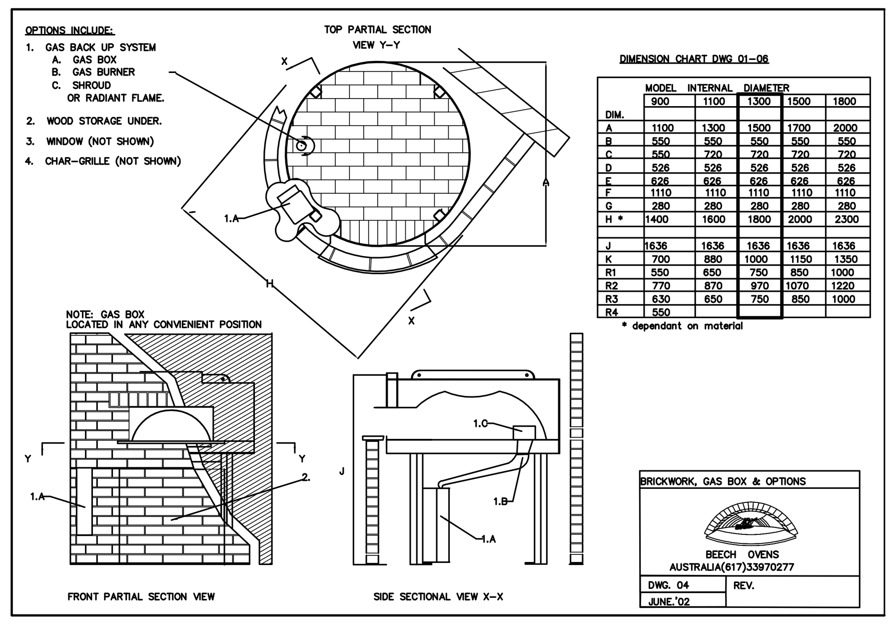

DIMENSION CHART DWG 01–06

DIM.	900	1100	1300	1500	1800
MODEL INTERNAL DIAMETER					
A	1100	1300	1500	1700	2000
B	550	550	550	550	550
C	550	720	720	720	720
D	526	526	526	526	526
E	626	626	626	626	626
F	1110	1110	1110	1110	1110
G	280	280	280	280	280
H *	1400	1600	1800	2000	2300
J	1636	1636	1636	1636	1636
K	700	880	1000	1150	1350
R1	550	650	750	850	1000
R2	770	870	970	1070	1220
R3	630	650	750	850	1000
R4	550				

* dependant on material

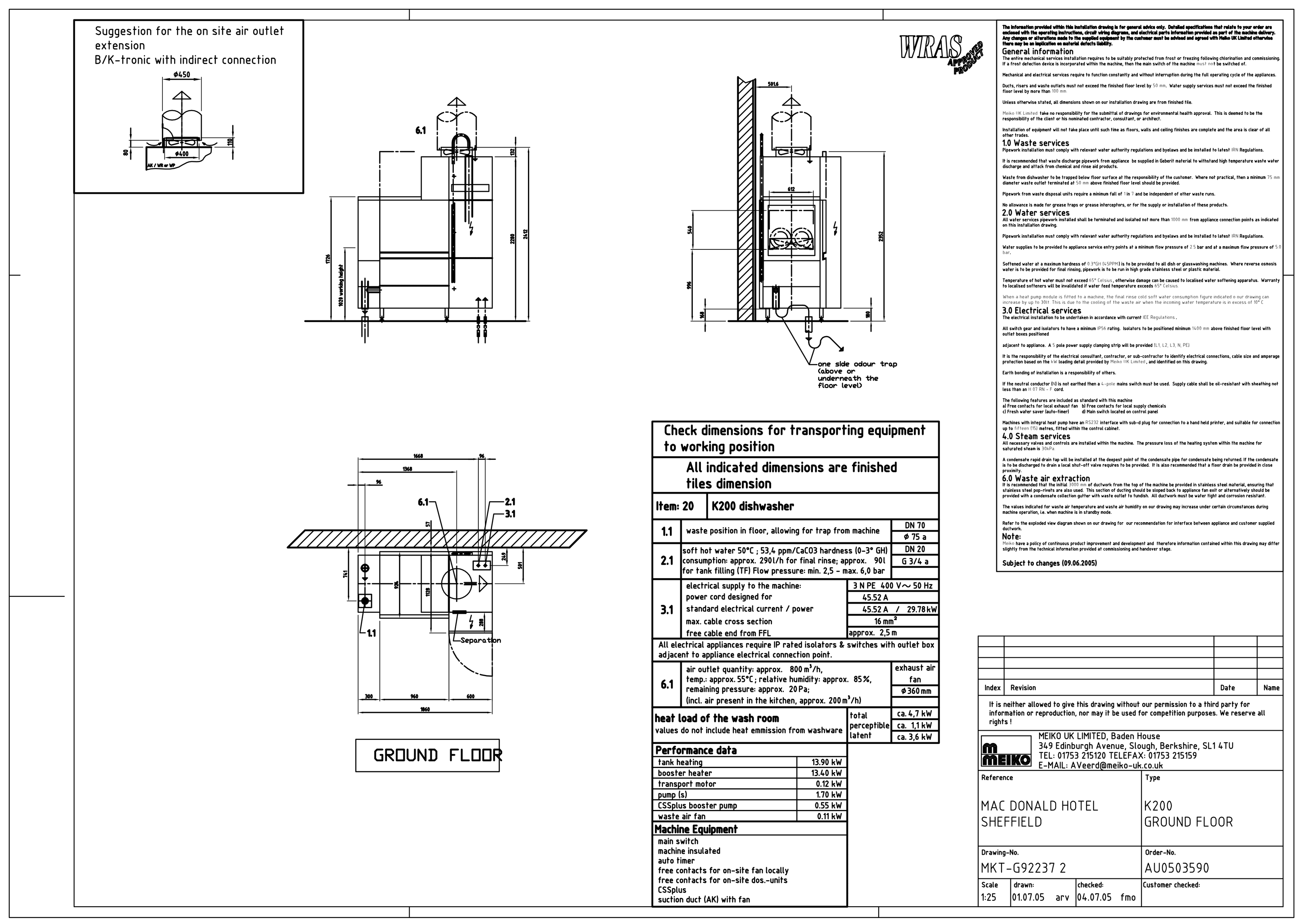

Check dimensions for transporting equipment to working position

All indicated dimensions are finished tiles dimension

Item: 20	K200 dishwasher	
1.1	waste position in floor, allowing for trap from machine	DN 70 / ø 75 a
2.1	soft hot water 50°C ; 53,4 ppm/CaCO3 hardness (0–3° GH) consumption: approx. 290l/h for final rinse; approx. 90l for tank filling (TF) Flow pressure: min. 2,5 – max. 6,0 bar	DN 20 / G 3/4 a
3.1	electrical supply to the machine: power cord designed for standard electrical current / power max. cable cross section free cable end from FFL	3 N PE 400 V~ 50 Hz / 45.52 A / 45.52 A / 29.78 kW / 16 mm² / approx. 2,5 m
	All electrical appliances require IP rated isolators & switches with outlet box adjacent to appliance electrical connection point.	
6.1	air outlet quantity: approx. 800 m³/h, temp.: approx. 55°C; relative humidity: approx. 85%, remaining pressure: approx. 20 Pa; (incl. air present in the kitchen, approx. 200 m³/h)	exhaust air fan / ø 360 mm
heat load of the wash room	values do not include heat emmission from washware	total ca. 4,7 kW / perceptible ca. 1,1 kW / latent ca. 3,6 kW

Performance data	
tank heating	13.90 kW
booster heater	13.40 kW
transport motor	0.12 kW
pump (s)	1.70 kW
CSSplus booster pump	0.55 kW
waste air fan	0.11 kW

Machine Equipment
main switch
machine insulated
auto timer
free contacts for on-site fan locally
free contacts for on-site dos.-units
CSSplus
suction duct (AK) with fan

General information · 1.0 Waste services · 2.0 Water services · 3.0 Electrical services · 4.0 Steam services · 6.0 Waste air extraction · Note: · Subject to changes (09.06.2005)

Index	Revision	Date	Name

It is neither allowed to give this drawing without our permission to a third party for information or reproduction, nor may it be used for competition purposes. We reserve all rights !

MEIKO UK LIMITED, Baden House
349 Edinburgh Avenue, Slough, Berkshire, SL1 4TU
TEL: 01753 215120 TELEFAX: 01753 215159
E-MAIL: AVeerd@meiko-uk.co.uk

Reference	Type
MAC DONALD HOTEL SHEFFIELD	K200 GROUND FLOOR
Drawing-No. MKT-G92237 2	Order-No. AU0503590
Scale 1:25 · drawn: 01.07.05 arv · checked: 04.07.05 fmo	Customer checked:

LAYOUT SUBJECT TO ALL LOCAL AUTHORITY APPROVALS
AND DETAILED FINISHED SITE DIMENSION CHECK

COURT CATERING EQUIPMENT LTD
UNIT 1, ACTON VALE INDUSTRIAL PARK,
COWLEY ROAD, LONDON W3 7QE
TEL:020 8746 0808
FAX:020 8746 1116
E-mail: projects@courtcatering.co.uk

CLIENT:
MACDONALD HOTELS & RESORTS

PROJECT:
PROPOSED HOTEL - ST.PAUL'S PLACE SHEFFIELD
GROUND FLOOR CATERING EQUIPMENT LAYOUT

SCALE: 1:50
DATE: -
DRAWN: S.O'F. (CAD)
PM: A.A.F.
PROJECT No: 2310326-9

© COPYRIGHT COURT CATERING EQUIPMENT LTD
THIS DRAWING MUST NOT BE REPRODUCED,MULTIPLIED OR SUBMITTED TO THE INSPECTION OF THIRD PARTIES WITHOUT OUR PRIOR PERMISSION.
WRITTEN DIMENSIONS TO BE PREFERED.
ALL DIMENSIONS TO BE CHECKED AND VERIFIED ON SITE.
ALL RIGHTS RESERVED.